REVISIONS				
ZONE	REV	DESCRIPTION	DATE	APPROVED

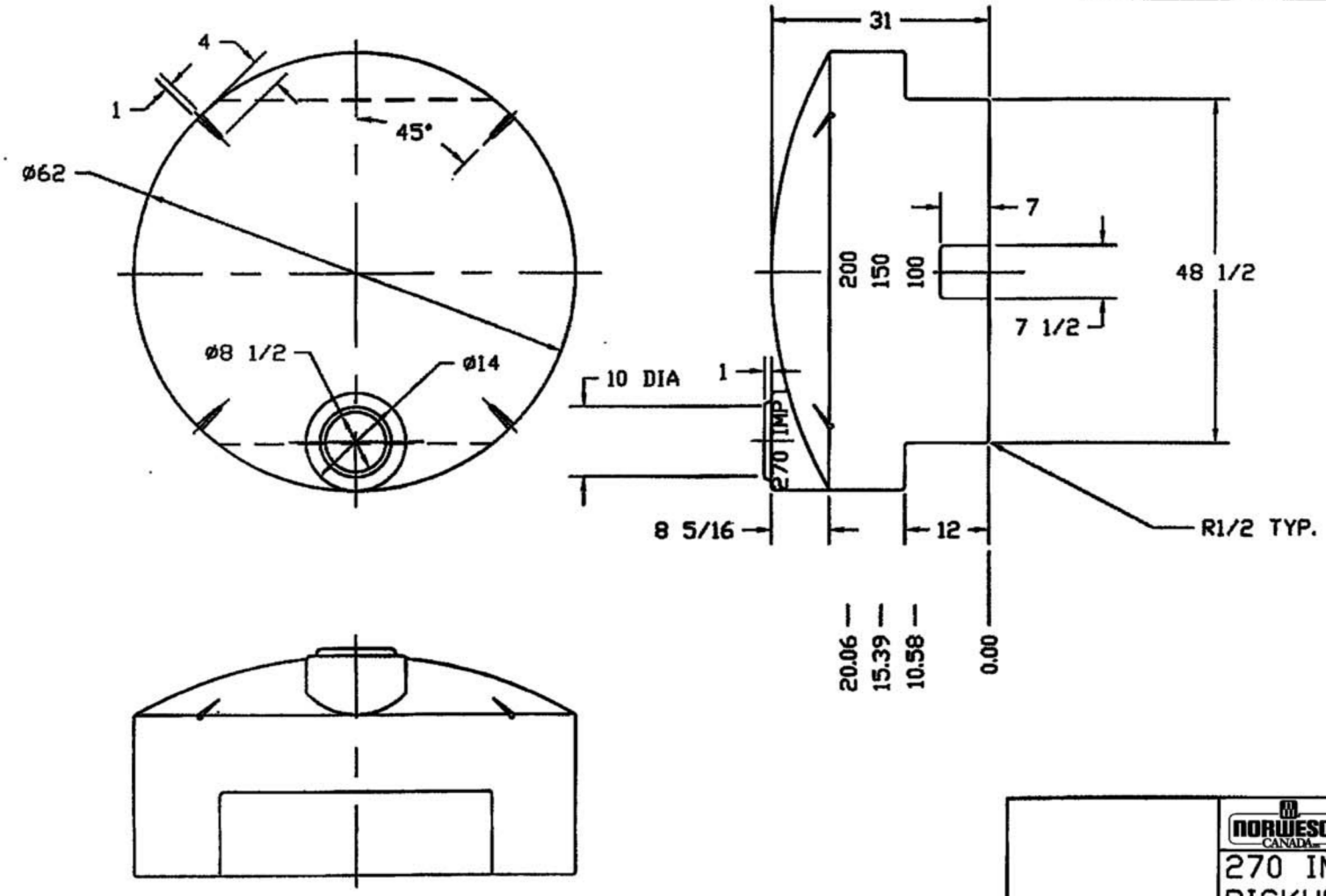

NORWESCO CANADA

270 IMP GALLON
PICKUP TANK

JTP 21AUG95	SIZE B	FSCM NO.	DWG NO. 40693	REV
	SCALE 1/16		SHEET	